# Triple Offset Butterfly Valve

## PN 63 DN 80 - DN 800

Butt Welding Ends type

Fig. 152B-552B

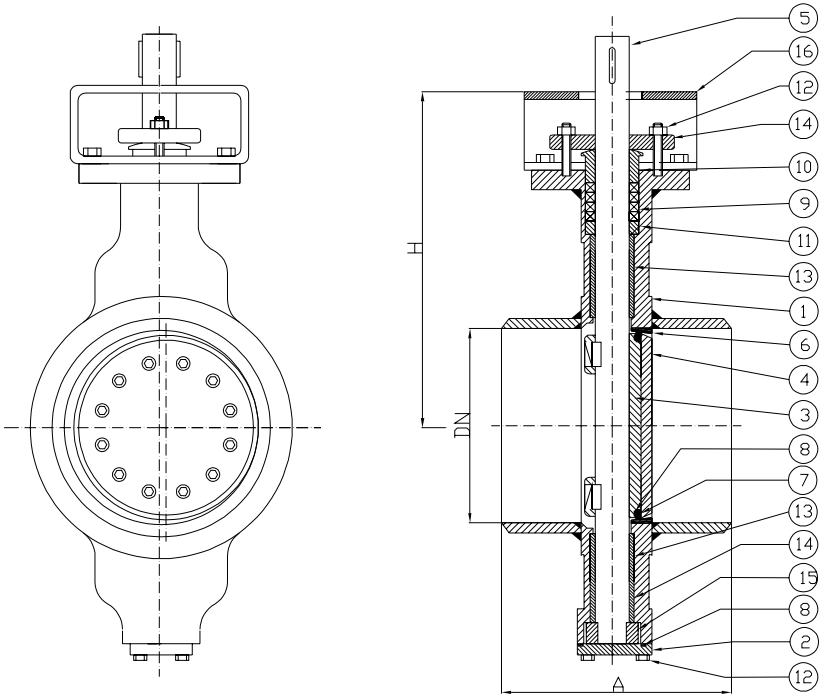


CE 0948

TÜV ITALIA 97/23/CE

## Standard features:

| | |
|---|---|
| ☑ Design | EN 12516 |
| | EN 593 |
| ☑ Face to face | EN 12982 series 66 |
| ☑ Butt welding ends | EN 12627 |
| ☑ Materials | EN 10025 |
| | EN 10028 |
| | EN 1503 |
| ☑ Bolts and nuts | EN 1515-1 |
| ☑ Welding overlay | AD-M HP 0 |
| ☑ Testing | EN 12266 |
| | API 598 |
| ☑ Marking | EN 19 |
| ☑ Certificates | EN 10204 |

## Optional versions:

- ☐ AD 2000 – A4
- ☐ TRD 110
- ☐ ATEX compliant
- ☐ TA-Luft
- ☐ ISO 15848
- ☐ With special devices

*Please refer to the catalogues in the download area for more details. All features and options can be subject to change without notice. © RT Valvole Industriali Srl, all rights reserved. Rev. 3.1*