Triple Offset Butterfly Valve

PN 63 DN 80 - DN 800

Flanged PN 63 or PN 40

Fig. 152F-552F

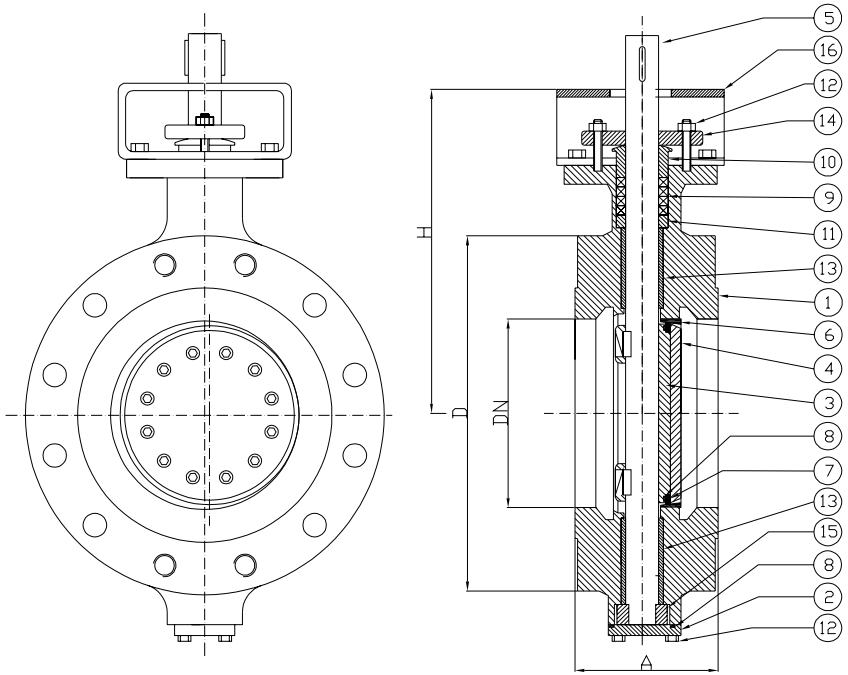

0948

Standard features:

☑ Design	EN 12516
	EN 593
☑ Face to face	ISO 5752 series 13
	EN 558-1 series 13
	BS 2080 series 13
☑ Flanges	EN 1092-1/21/B2
☑ Materials	EN 10213
	EN 10025 / EN 10028
	EN 1503
☑ Bolts and nuts	EN 1515-1
☑ Welding overlay	AD-M HP 0
☑ Testing	EN 12266
	EN 593
☑ Marking	EN 19
☑ Certificates	EN 10204

Optional versions:

- ☐ AD 2000 – A4
- ☐ TRD 110
- ☐ ATEX compliant
- ☐ TA-Luft
- ☐ ISO 15848
- ☐ With special devices

Please refer to the catalogues in the download area for more details. All features and options can be subject to change without notice. © RT Valvole Industriali Srl, all rights reserved. Rev. 3.1